ENVIRONMENTAL RESEARCH
LETTERS

LETTER • OPEN ACCESS

Does replacing coal with wood lower CO_2 emissions? Dynamic lifecycle analysis of wood bioenergy

To cite this article: John D Sterman *et al* 2018 *Environ. Res. Lett.* **13** 015007

View the article online for updates and enhancements.

Recent citations

- Quantifying forest growth uncertainty on carbon payback times in a simple biomass carbon model
Will Rolls and Piers M Forster

- Focus on the role of forests and soils in meeting climate change mitigation goals: summary
William R Moomaw *et al*

- Is wood pellet-based electricity less carbon-intensive than coal-based electricity? It depends on perspectives, baselines, feedstocks, and forest management practices
Puneet Dwivedi *et al*

This content was downloaded from IP address 24.69.165.119 on 04/04/2021 at 03:31

Environmental Research Letters

OPEN ACCESS

RECEIVED
29 August 2017

REVISED
1 December 2017

ACCEPTED FOR PUBLICATION
4 January 2018

PUBLISHED
18 January 2018

Original content from this work may be used under the terms of the Creative Commons Attribution 3.0 licence.

Any further distribution of this work must maintain attribution to the author(s) and the title of the work, journal citation and DOI.

LETTER

Does replacing coal with wood lower CO_2 emissions? Dynamic lifecycle analysis of wood bioenergy

John D Sterman[1,4], **Lori Siegel**[2] **and Juliette N Rooney-Varga**[3]

[1] MIT Sloan School of Management, 100 Main Street, Cambridge, MA 02139, United States of America
[2] Climate Interactive, 1201 Connecticut Avenue NW, Suite 300, Washington, DC, 20036, United States of America
[3] UMass Lowell Climate Change Initiative and Deptartment of Environmental, Earth, and Atmospheric Sciences, 265 Riverside Street, Lowell, MA 01854, United States of America
[4] Author to whom any correspondence should be addressed.

E-mail: jsterman@mit.edu

Keywords: bioenergy, biofuels, wood pellets, greenhouse gas emissions, climate change, system dynamics

Supplementary material for this article is available online

Abstract

Bioenergy is booming as nations seek to cut their greenhouse gas emissions. The European Union declared biofuels to be carbon-neutral, triggering a surge in wood use. But do biofuels actually reduce emissions? A molecule of CO_2 emitted today has the same impact on radiative forcing whether it comes from coal or biomass. Biofuels can only reduce atmospheric CO_2 over time through post-harvest increases in net primary production (NPP). The climate impact of biofuels therefore depends on CO_2 emissions from combustion of biofuels versus fossil fuels, the fate of the harvested land and dynamics of NPP. Here we develop a model for dynamic bioenergy lifecycle analysis. The model tracks carbon stocks and fluxes among the atmosphere, biomass, and soils, is extensible to multiple land types and regions, and runs in ≈1s, enabling rapid, interactive policy design and sensitivity testing. We simulate substitution of wood for coal in power generation, estimating the parameters governing NPP and other fluxes using data for forests in the eastern US and using published estimates for supply chain emissions. Because combustion and processing efficiencies for wood are less than coal, the immediate impact of substituting wood for coal is an increase in atmospheric CO_2 relative to coal. The payback time for this carbon debt ranges from 44–104 years after clearcut, depending on forest type—assuming the land remains forest. Surprisingly, replanting hardwood forests with fast-growing pine plantations raises the CO_2 impact of wood because the equilibrium carbon density of plantations is lower than natural forests. Further, projected growth in wood harvest for bioenergy would increase atmospheric CO_2 for at least a century because new carbon debt continuously exceeds NPP. Assuming biofuels are carbon neutral may worsen irreversible impacts of climate change before benefits accrue. Instead, explicit dynamic models should be used to assess the climate impacts of biofuels.

1. Introduction

Limiting global warming to no more than 2 °C requires large, rapid cuts in fossil fuel consumption by mid-century (Figueres *et al* 2017, IPCC 2014). In response, governments around the world are promoting biomass to reduce their greenhouse gas (GHG) emissions. The European Union declared biofuels to be carbon-neutral to help meet its goal of 20% renewable energy by 2020, triggering a surge in use of wood for heat and electricity (European Commission 2003, Leturcq 2014, Stupak *et al* 2007). The United Kingdom subsidizes wood pellets for electric power generation and has become the world's largest pellet importer (Thrän *et al* 2017). The US federal government and a number of US states are considering whether to declare wood fuels carbon-neutral or to promote their use (Cornwall 2017), while at COP23 in Bonn 'China and 18 other nations representing half the world's population said…they planned to increase the use of wood...to generate energy as part of efforts to limit climate change' (Biofuture Platform 2017, Doyle and Roche 2017).

© 2018 The Author(s). Published by IOP Publishing Ltd

But do biofuels actually reduce GHG emissions? The appeal is intuitive: fossil fuels inject carbon sequestered in geological reservoirs for millions of years into the atmosphere, where it accumulates and causes global warming (IPCC 2013). In contrast, biofuels recycle carbon from the atmosphere, helping to keep fossil carbon in the ground (IPCC 2013).

However, a molecule of CO_2 added to the atmosphere today has the same impact on radiative forcing and warming whether it came from coal millions of years old or biomass grown last year. Biofuels can only reduce atmospheric CO_2 over time by increasing net primary production (NPP) above what it otherwise would have been (DeCicco 2013). Assessing the climate impact of wood and other biofuels therefore depends on two critical questions: first, at the point of combustion, do biofuels generate more or less CO_2 per unit of end-use energy than fossil fuels? Second, what are the dynamics of biomass (re)growth and how do NPP and carbon fluxes from biomass and soils depend on the fate of the harvested land?

Confusion over these questions has caused the scientific debate over the climate impact of bioenergy and, especially wood, to remain 'contentious' (Creutzig *et al* 2015, Ter-Mikaelian *et al* 2015). The wood industry and many governments promote wood as a renewable, carbon-neutral fuel, while many environmental groups oppose wood bioenergy because it causes deforestation, harming natural carbon sinks, ecosystems, and biodiversity (Cornwall 2017). Advocates emphasize a long time horizon to evaluate the impact of biofuels, a century or more, by which time it is assumed forests will regrow, offsetting initial emissions. Opponents point to the potential for wood energy to increase CO_2 levels in the short run, incurring a 'carbon debt' that can only be paid off slowly, and worry that the resulting increase in atmospheric CO_2 will worsen global warming and lead to irreversible impacts before the benefits of new growth can occur (Brack 2017, Buchholz *et al* 2016, Cornwall 2017).

Life cycle analysis is commonly used to answer the first question. Results vary with the assumed system boundary and biofuel harvesting, processing and transport methods (e.g. Buchholz *et al* 2016). However, although wood has approximately the same carbon intensity as coal (0.027 vs. 0.025 tC GJ^{-1} of primary energy; see supplementary material), combustion efficiency of wood and wood pellets is lower (Netherlands Enterprise Agency; IEA 2016). Estimates also suggest higher processing losses in the wood supply chain (Röder *et al* 2015). Consequently, wood-fired power plants generate more CO_2 per kWh than coal (supplementary table S5 available at stacks.iop.org/ERL/13/015007/mmedia). Burning wood instead of coal therefore creates a carbon debt—an immediate increase in atmospheric CO_2 compared to fossil energy—that can be repaid over time only as—and if— NPP rises above the flux of carbon from biomass and soils to the atmosphere on the harvested lands.

Dynamic analysis is required to answer the second question (e.g. Helin *et al* 2013). The carbon cycle and climate impacts of bioenergy involve multiple stocks of carbon (e.g. in biomass, soils and dead organic matter, and the atmosphere) and the processes that control the flow of carbon among those stocks including NPP, transfer of carbon from biomass to soil, decomposition of organic matter, consumption and respiration of carbon in biomass and soils, etc. Tools are needed to assess the dynamic climate impact of bioenergy over policy-relevant time horizons. Because of the uncertainty and debate over the impacts of biofuels, such tools should allow users to examine alternative assumptions and scenarios easily and quickly, and would avoid the need to use static summary metrics such as global warming potentials (GWP) and contentious debate over the appropriate time horizon for these approximations, e.g. whether to use GWP20 or GWP100 (Ocko *et al* 2017).

To address this need we developed an interactive decision-support model that enables policymakers and other stakeholders to explore the dynamic impact of biofuels on carbon emissions and climate. The model is fully documented, freely available, runs in about a second on ordinary laptops and is extensible to any number of land use categories and spatial scales. Users receive immediate feedback on the impacts of their scenarios and assumptions. Here we describe the model and use it to explore the dynamics of substituting wood for coal in electric power production, using wood sourced from a range of forest types in the US to estimate model parameters governing NPP and carbon fluxes.

2. Methods

2.1. Model structure

We build on the widely-used C-ROADS climate policy model (Sterman *et al* 2012, Sterman *et al* 2013), developing a more detailed representation of land use, the carbon stocks associated with different types of land and the fluxes arising from them. C-ROADS is a member of the family of simple climate models, consisting of a system of differential equations representing the carbon cycle, budgets and stocks of GHGs, radiative forcing and the heat balance of the Earth. C-ROADS closely replicates GHG concentrations, global mean surface temperature, and other climate metrics from 1850, and matches CMIP5 model projections through 2100 across a wide range of Representative Concentration Pathways (RCPs) (Knutti and Sedlacek 2013, Vuuren *et al* 2011). C-ROADS has been used by policymakers (Sterman *et al* 2012) and is freely available (www.climateinteractive.org).

The carbon cycle in the original C-ROADS model includes globally aggregated stocks of carbon in fossil fuels, the atmosphere, terrestrial biomass and soils, and a four-layer ocean. Here we disaggregate the treatment

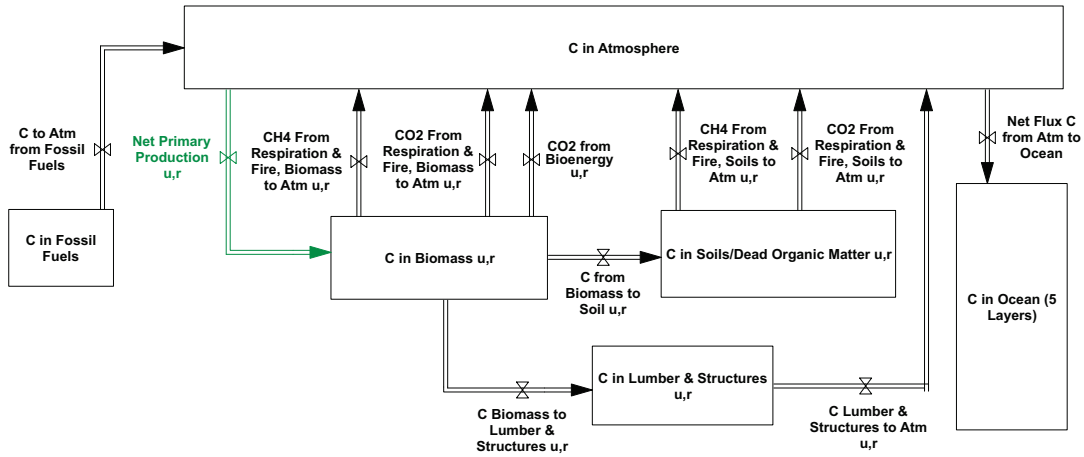

Figure 1. Modified carbon cycle in extended C-ROADS model. Carbon in biomass, soils, and structures (e.g. lumber in buildings), and fluxes among these compartments, are disaggregated by land type, *u*, and region, *r*. Carbon can flow from biomass and soils from each patch, *u*, *r*, to the atmosphere as CO_2 or CH_4. In addition, bioenergy harvest and combustion generate CO_2. CO_2 and CH_4 fluxes associated with changes in land use, e.g. from forest to pasture, cropland or developed land are included in the model but not shown here. On the policy-relevant time scale (e.g. through 2100), creation of new fossil fuels from terrestrial or oceanic carbon sources assumed to be negligible. Note: as described in the text and supplementary material, CH_4 fluxes from biomass and soils are set to zero for forest scenarios considered here to isolate the impact of bioenergy in the scenarios tested.

of terrestrial carbon stocks both geographically and by land type (e.g. forest, pasture, cropland, developed land, etc.). For each region, the model represents the area of each type of land and changes in land use resulting from natural processes and human activity, along with the carbon stocks and fluxes associated with each. The model is extensible to any number of land/land use categories and geographic areas. For example, one could configure the model to represent different types of forests, with similar disaggregation for other land types, and at geographic scales from regions to nations to, if data are available, even smaller areas.

Figure 1 shows an overview of the carbon cycle in the extended model. As in the original model, combustion of fossil fuels injects carbon into the atmosphere. Unlike the original model, carbon stocks in biomass and soil are now represented for each category of land and geographical area. The model also includes a compartment for carbon stored in lumber and structures. Consistent with reporting approaches for the IPCC, FAO, and US Forest Service (FAO 2016, Penman *et al* 2003, Smith *et al* 2006), biomass in forest land includes living trees, including stems, branches, foliage, and coarse roots in both mature and understory trees; the stock denoted 'soil carbon' includes soil organic matter, dead roots, litter (dead foliage, dead branches, etc), downed and standing dead trees, and living fine roots (Woodall *et al* 2015). Biomass is increased by net primary production. Carbon in biomass can return to the atmosphere as CO_2 or CH_4 and is transferred to the soil stock via litterfall and tree mortality. Carbon is also lost from both biomass and dead organic matter by fire. Carbon in the soil stock is transferred to the atmosphere through the activity of decomposers and other heterotrophs (Fahey *et al* 2005). The supplementary material provides full documentation.

Although the model can be configured for any number of land types and uses, here we focus on wood harvested for electricity generation. For simplicity, we configure the model to represent one region with three categories of land: unmanaged forest, recently harvested forest, and 'other,' which includes all other land use categories (cropland, pasture, developed land, etc.).

2.2. Parameter estimation

Each unit of end-use bioenergy displaces the same end-use energy generated from fossil fuels, so net CO_2 emissions from biomass at the point of combustion depend on which energy source is more efficient overall, given fuel carbon intensity, combustion efficiency, processing losses, and emissions from their supply chains. Typical combustion efficiencies for wood are approximately 25%, compared to 35% for coal (Netherlands Enterprise Agency 2011, IEA 2016). Published estimates vary with the process examined and the system boundary considered, but processing losses (in energy content) for the wood pellet supply chain are on the order of approximately 27% if biomass is used in the drying process (Röder *et al* 2015), compared to losses of approximately 11% for coal (IEA 2016). Differences in supply chain emissions from extraction/harvest, and transportation are uncertain but relatively small compared to the large differences in combustion and processing efficiencies (e.g. Odeh and Cockerill 2008, Röder *et al* 2015). Consequently, wood pellets emit approximately 0.071 tC more CO_2 per GJ of end-use energy than coal (see supplementary material).

The determinants of NPP and carbon fluxes from biomass and soil to the atmosphere are therefore critical to assessing the dynamic impact of bioenergy including the carbon debt payback period and long-run reduction in atmospheric CO_2. To estimate the parameters

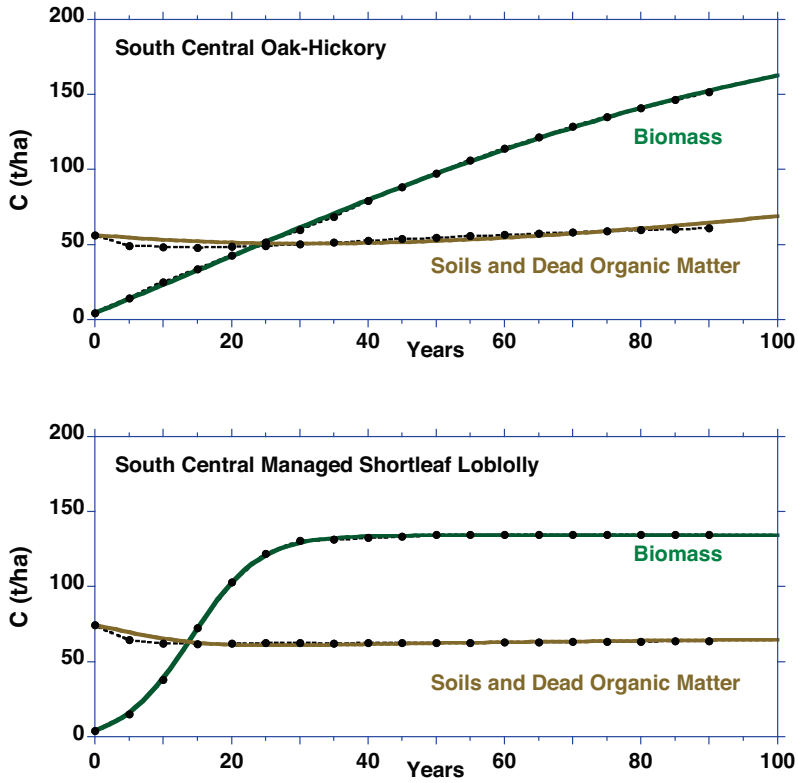

Figure 2. Growth curves showing carbon density (tC ha^{-1}) for oak–hickory (top) and managed shortleaf loblolly pine plantations (bottom) in the south-central US, comparing Smith *et al* (2006) growth curves (dashed lines with data points) to the model (solid lines), with best-fit parameters. Supplementary figure S2 and tables S2–S3 show results for all forest types estimated.

governing NPP and these fluxes we use the post-harvest growth curves in Smith *et al* (2006), which span many regions and species in US forests. To illustrate, figure 2 shows the Smith *et al* growth curves for south-central US oak–hickory forest and managed shortleaf loblolly pine plantations. The growth patterns differ markedly in both their shape and time required to reach maximum biomass. After harvest, the managed loblolly plantation regrows quickly, following a classic S-shaped curve and reaching maximum biomass after about three decades, while the hardwood forest grows roughly linearly for about 50 years and is still growing after a century. Note that in both cases, soil carbon declines for several decades after harvest because the C flux from biomass to soils is cut while heterotrophic respiration continues to release C from soils and dead organic matter to the atmosphere.

To model NPP we specify a variant of the Richards (1959) growth model, widely used in forest growth modeling. The US wood pellet industry is growing rapidly, and much of the production is exported to the EU and UK. We therefore estimate the carbon cycle parameters from growth curves for temperate US forests reported by Smith *et al* (2006). We estimate the parameters of NPP jointly with those governing fluxes of CO_2 from biomass to soil and from each compartment to the atmosphere using nonlinear least squares and Markov Chain Monte Carlo methods (supplementary material). The model fits the Smith *et al* growth curves closely: the mean absolute error relative to the mean ranges from 0.008%–0.065% for biomass and from 0.006%–0.074% for soils (figure 2, table S2).

3. Results

In the scenarios below, we adopt assumptions that favor bioenergy. Specifically, we assume bioenergy from wood pellets is used to offset coal, the most carbon intensive fossil fuel; if wood offsets power generated from natural gas its carbon debt would be much larger. Estimates of net CH_4 fluxes from forest biomass and soils are poorly constrained and considered to be insignificant in most global methane budgets (e.g. Ito and Inatomi 2012, Saunois *et al* 2016, Shoemaker *et al* 2014); we therefore assume them to be zero. We assume all land harvested for bioenergy is allowed to regrow without any fire (Buchholz *et al* 2016), erosion, disease, unplanned logging, or other ecological disturbances, including climate change impacts, that could limit regrowth or inject GHGs into the atmosphere beyond the direct impact of the bioenergy harvest. We further assume that the decline in coal use resulting from wood does not lower coal prices, increasing coal demand elsewhere, an effect estimated to be large (e.g. York 2012).

To isolate the dynamic impact of bioenergy on CO_2 emissions we run the model from an initial equilibrium

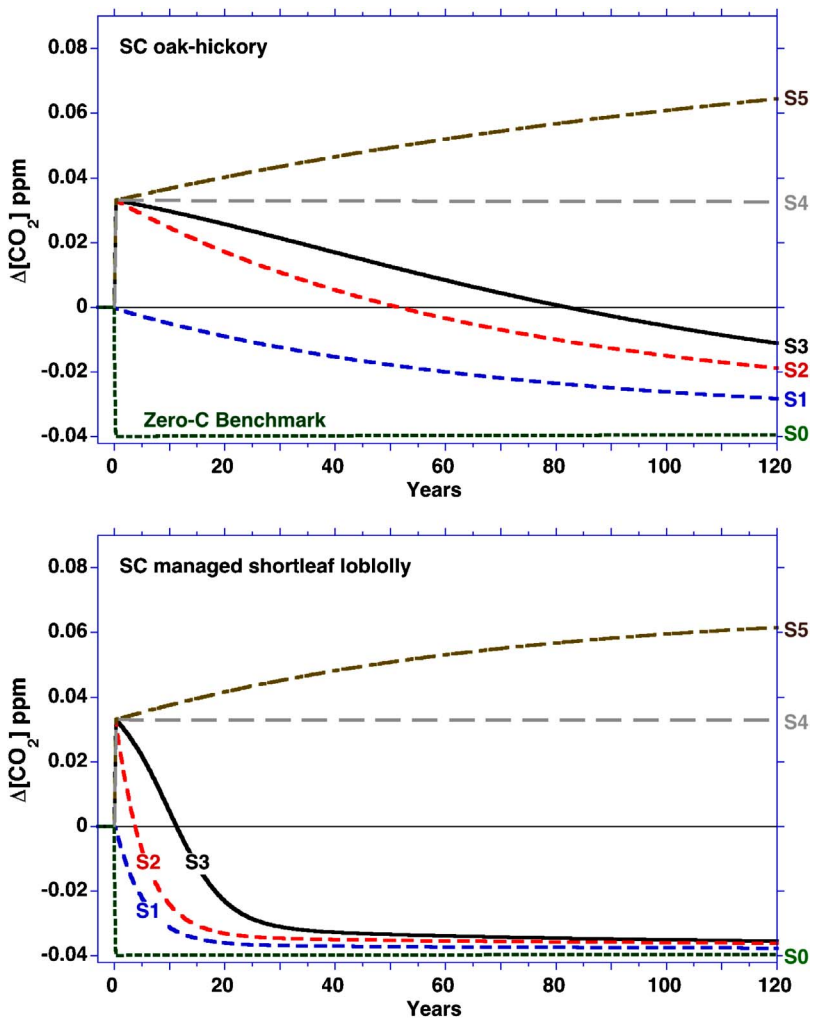

Figure 3. Change in atmospheric CO_2 concentration resulting from displacement of coal by wood. $\Delta[CO_2]$ is relative to continued coal use. All scenarios show the change in atmospheric CO_2 (ppmv) resulting from a single 1 EJ pulse of end-use energy from biomass used to displace coal in year 0. Top: south-central (SC) oak–hickory forest; bottom: SC managed shortleaf loblolly plantation. The bioenergy pulse causes an immediate increase in CO_2 concentration (the initial carbon debt) in scenarios 2–5 due to lower combustion and processing efficiencies for wood compared to coal. The year in which $\Delta[CO_2]$ falls below zero is the carbon debt payback time. Supplement figure S3 shows the results for all eight forest types examined. S0: Benchmark showing impact of 1 EJ pulse of zero carbon energy. S1: Bioenergy assumed to have the same combustion and processing efficiency as coal, and the same supply chain emissions; with 25% of biomass removed from the land harvested through thinning. S2: Actual efficiencies and supply chain emissions for wood pellets; 25% of biomass harvested through thinning. S3: S2 with 95% of biomass harvested (clear cut). S4: S3 with clear cut and no regrowth of harvested land and no C released from soil stocks. S5: S4 with C released from soil stocks at the estimated fractional rate.

in which the carbon fluxes from biomass and soils to the atmosphere are balanced by NPP, and in which net CO_2 flux to the ocean is zero throughout, identifying the impacts of bioenergy separate from other sources of disequilibrium, e.g. prior logging and marine uptake of CO_2. Including ocean CO_2 uptake would moderate increases in atmospheric CO_2 from bioenergy but worsen ocean acidification and other impacts. These effects are left for future work.

Figure 3 shows the results for a set of scenarios using parameters estimated for oak–hickory forest in the south-central US (supplementary figure S3, table S7 provide results for all eight forest types we estimated). All scenarios examine a 1 exajoule (EJ) pulse of end-use electric energy generated from wood pellets in year 0, offsetting 1 EJ of end-use electricity generated from coal (total world energy use exceeds 550 EJ yr^{-1}, US EIA 2016).

Scenario 0 provides a benchmark showing how atmospheric CO_2 would change if 1 EJ of end-use energy from coal were offset by a zero-carbon energy source, such as solar or wind (and assuming zero emissions from the supply chain). Displacing 1 EJ of end-use energy from coal with a zero C alternative keeps 0.07 GtC of fossil carbon in the ground, immediately and permanently lowering atmospheric CO_2 by approximately 0.04 ppm relative to continued coal use.

Scenario 1 simulates the counterfactual case in which bioenergy is assumed to have the same carbon emissions per EJ of end-use energy as coal, including the same combustion and processing efficiency and supply chain emissions. We assume that 25%

of the biomass is removed from each hectare of the harvested forest by thinning, not clear cutting, that the forest is allowed to regrow with no subsequent harvest, fire, disease, or other disturbances. Because emissions are counterfactually assumed to be the same as coal, there is no immediate change in atmospheric CO_2. However, as the forest grows back, carbon is gradually removed from the atmosphere to biomass and soils. After 100 years, the forest has recovered enough to lower atmospheric CO_2 by 0.026 ppm, still 34% above the zero C case.

Scenario 2 shows the realistic case with the combustion efficiency and supply chain emissions estimated for wood pellets (supplementary table S5), again assuming 25% of the biomass is harvested by thinning. Because production and combustion of wood generate more CO_2 than coal, the first impact of bioenergy use is an increase in atmospheric CO_2. Regrowth gradually transfers C from the atmosphere to biomass and soil C stocks, leading to a carbon debt payback time of 52 years; after 100 years CO_2 remains 62% above the zero C case.

Scenario 3 is the same as S2 except we now assume the land is clear cut instead of thinned, with 95% of the biomass removed. Near-complete biomass removal reflects the growing practice of harvesting whole trees and residues (branches, litter, etc) (Achat *et al* 2015). A 95% clear cut requires only 26% as much land as in S2, but the carbon debt payback time increases to 82 years; after 100 years CO_2 remains 86% above the zero C case.

Scenario 4 shows the impact of assuming that the harvested area is clear cut as in S3 but never allowed to regrow, for example, because it is developed, with the additional assumption that the flux of C from soils and dead organic matter to the atmosphere is set to zero. Without regrowth, the carbon debt is never repaid and atmospheric CO_2 remains permanently higher.

Scenario 5 is the same as S4 except the flux of C to the atmosphere from soils and dead organic matter continues at the original fractional rate. Without regrowth, there is no flux of CO_2 from the atmosphere to terrestrial biomass or soils, but continued C flux from soils to atmosphere, causing CO_2 concentrations to rise beyond the immediate impact of the bioenergy. After a century atmospheric CO_2 has risen by 0.076 ppm, 2.3 times more than the initial impact. The actual impact of converting harvested forests to other uses will likely lie between the results of Scenarios 4 and 5, but could rise further if conversion of forest to other uses increases C fluxes from soils above the values estimated from the Smith *et al* (2006) data. Such an outcome could result from disturbances to soils from, e.g. plowing, development, fire or increasing methanogenesis, all of which we assume to be zero.

In Scenario 6 (figure 4) oak–hickory forest is clear cut and replanted as a shortleaf loblolly pine managed plantation. Loblolly pine grows faster than hardwoods (figure 2), so intuitively the conversion from unmanaged hardwood forest to managed pine plantation should speed the repayment of the carbon debt. As expected, atmospheric CO_2 initially falls faster in the plantation case compared to regrowth of the oak–hickory forest. However, the concentration bottoms out after approximately 20 years and then starts to rise, exceeding the CO_2 level when the forest is allowed to regrow. The explanation lies in the different maximum carbon densities of the two forest types: loblolly plantation grows faster but reaches a lower equilibrium carbon density compared to the unmanaged forest (figure 4), with estimated equilibrium values of 130 tC ha^{-1} for loblolly plantation vs. 211 tC ha^{-1} for oak–hickory. Consequently, although plantations grow faster, they do not remove as much C from the atmosphere as was lost when the hardwood forest was harvested, even if allowed to grow to their maximum biomass and remain unharvested. In reality, plantations are thinned every few years and harvested about every decade (US Forest Service 2000), further lowering their average C density and increasing atmospheric CO_2. Furthermore, repeated harvests can degrade the productivity of the soils, lowering NPP. To compensate, managed plantations are typically fertilized several times per rotation, increasing N_2O emissions that would further worsen the climate impact of Scenario 6 (Schulze *et al* 2012).

The supplementary material reports the 95% confidence intervals (CIs) for the estimated parameters (table S4), and sensitivity analysis across the eight forest types arising from parameter uncertainty, computed by Markov Chain Monte Carlo (table S8). The 95% CIs for the carbon debt payback times vary from 74–110 years for the hardwood species under clear cut (Scenario 3) and 11.25–12 years for the managed plantations. The supplementary material also reports the long-run CO_2 reductions for Scenarios 1–5 (table S7). For Scenario 3, after 100 years CO_2 falls an average of 51% of the maximum possible reduction (the difference between the initial carbon debt and the zero-C level in Scenario 0) for the forests and 92% for the plantations.

The supplementary material also reports sensitivity analysis of combustion efficiencies and supply chain emissions. Clearly, innovation that improves the combustion and processing efficiencies of wood *relative to coal* reduces the initial carbon debt of wood and reduces the carbon debt payback time and climate impacts of wood. However, innovations that improve the efficiencies of *both* fuels yield smaller benefits. For example, combined heat and power systems offer substantially higher combustion efficiency than conventional boilers, but would still cause an initial carbon debt since the combustion and processing efficiencies of wood remain lower than coal in such systems (supplementary figures S5–6).

The wood pellet industry is expanding rapidly and many projections call for substantial growth through 2030 or beyond (IEA 2012, IRENA 2015). Scenario 7 (figure 5) shows the impact of linear growth in

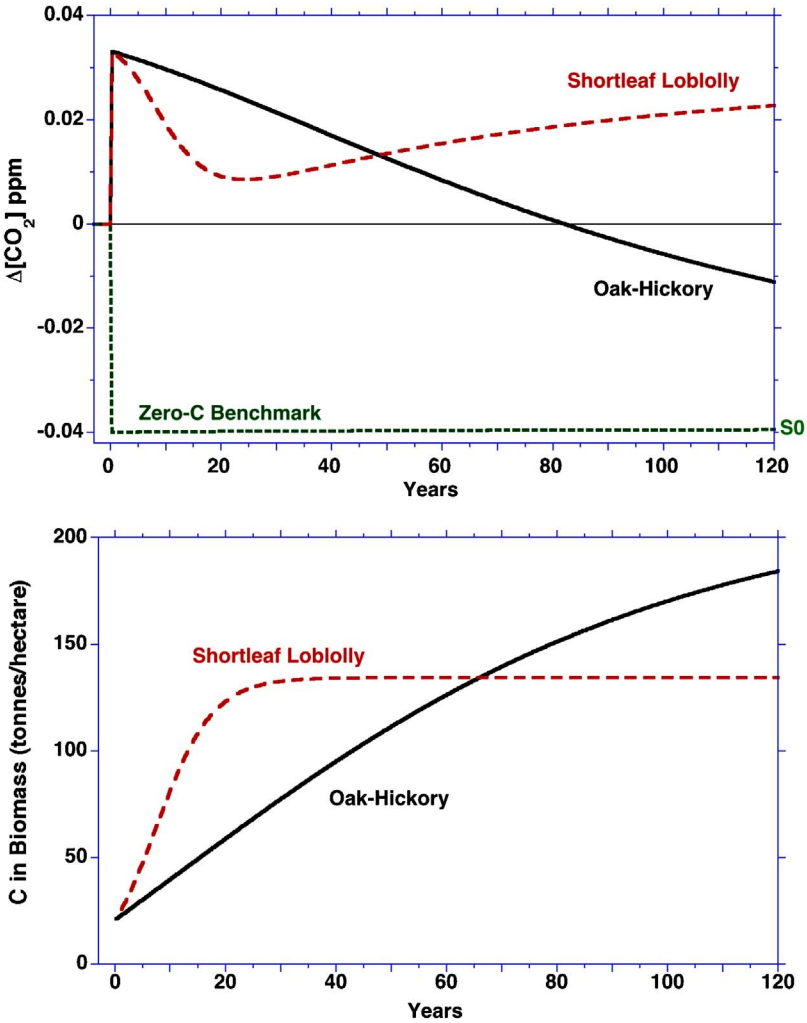

Figure 4. Scenario 6: replanting harvested oak–hickory forest after clear cut with managed plantation of shortleaf loblolly pine (south-central US), compared to allowing the oak–hickory forest to regrow (Scenario 3 in figure 2). Top: change in atmospheric CO_2 (ppmv) resulting from a single 1 EJ pulse of end-use energy from biomass used to displace coal in year. $\Delta[CO_2]$ is relative to continued coal use. Bottom: carbon in biomass (tC ha^{-1}). For the first 20 years, faster-growing loblolly pine lowers atmospheric CO_2 compared to regrowth of the oak–hickory forest, but the estimated maximum carbon density of oak–hickory forest is larger than the managed loblolly plantation (211 vs. 131 tC ha^{-1}, respectively; supplementary table S3). Consequently, the carbon debt is never repaid even if the loblolly plantation is never harvested. Due to CO_2 flux from soils, atmospheric CO_2 rises after approximately 20 years, exceeding the level from regrowth of oak–hickory after approximately 50 years.

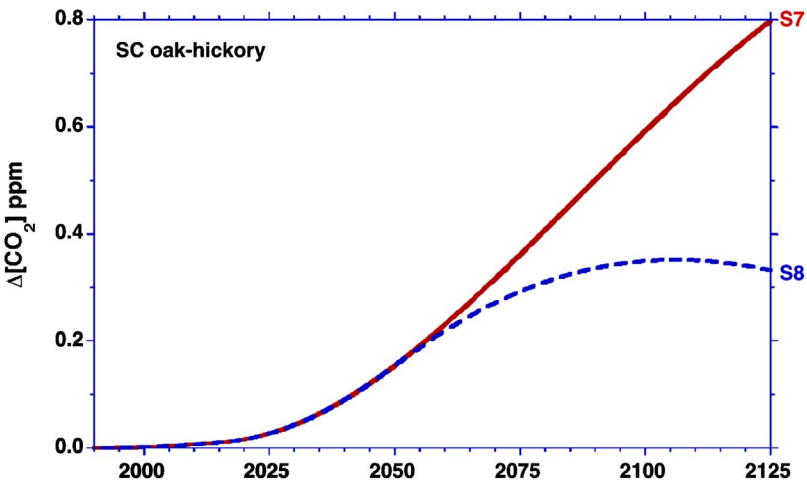

Figure 5. Change in atmospheric CO_2 concentration resulting from growth in end-use energy supplied by wood, displacing coal. $\Delta[CO_2]$ is relative to continued coal use. Scenario 7 (solid line): linear growth in end-use energy supplied by US wood pellet production, from the 2016 value of 0.028 EJ to 0.28 EJ yr^{-1} by 2050 and continuing linearly thereafter. Parameters estimated for south-central US oak–hickory forest, with harvest by clearcut. Scenario 8 (dashed line): the same as S7 except growth in end-use energy supplied by wood ceases in 2050. Supplementary figure S4 reports results for all forest types considered.

end-use bioenergy; Scenario 8 is the same except growth ceases in 2050. Growth in wood supply causes steady growth in atmospheric CO_2 because more CO_2 is added to the atmosphere every year in initial carbon debt than is paid back by regrowth, worsening global warming and climate change. The qualitative result that growth in bioenergy raises atmospheric CO_2 does not depend on the parameters: as long as bioenergy generates an initial carbon debt, increasing harvests mean more is 'borrowed' every year than is paid back. More precisely, atmospheric CO_2 rises as long as NPP remains below the initial carbon debt incurred each year plus the fluxes of carbon from biomass and soils to the atmosphere. Note further that in Scenario 8, CO_2 continues to rise for 56 years after bioenergy production growth stops and only falls below initial levels 144 years after growth stops. Results for the other forest types are similar (supplementary figure S4).

4. Discussion and conclusion

We extended the carbon cycle model in the C-ROADS climate policy model to account for different land and land use types, by region. The model explicitly treats stocks of carbon in fossil fuels, biomass, soils and dead organic matter, the atmosphere, and the fluxes among them including combustion, supply chain emissions, and regrowth of harvested lands. The model is extensible to any number of land types and uses, and geographic scales. To demonstrate the approach, we analyzed the dynamic impact of displacing coal with wood in electricity production, finding:

First, yet contrary to the policies of the EU and other nations, biomass used to displace fossil fuels injects CO_2 into the atmosphere at the point of combustion and during harvest, processing and transport. Reductions in atmospheric CO_2 come only later, and only if the harvested land is allowed to regrow.

Second, the combustion and processing efficiencies of wood in electricity generation are lower than for coal (supplementary material). Consequently, the first impact of displacing coal with wood is an increase in atmospheric CO_2 relative to continued coal use, creating an initial carbon debt.

Third, after the carbon debt is repaid, atmospheric CO_2 is lower, showing the potential long-run benefits of bioenergy. However, before breakeven, atmospheric CO_2 is higher than it would have been without the use of bioenergy, increasing radiative forcing and global average temperatures, worsening climate change, including potentially irreversible impacts that may arise before the long-run benefits are realized.

Fourth, biofuels are only beneficial in the long run if the harvested land is allowed to regrow to its pre-harvest biomass and maintained there. Natural forests have high carbon density compared to pasture, cropland, developed land and managed tree plantations. The carbon debt incurred when wood displaces coal may never be repaid if development, unplanned logging, erosion or increases in extreme temperatures, fire, and disease (all worsened by global warming) limit regrowth or accelerate the flux of carbon from soils to the atmosphere. Further, lower coal prices caused by the drop in power sector demand may stimulate coal use elsewhere, offsetting even the potential long-run benefits of bioenergy (e.g. York 2012).

Fifth, counter to intuition, harvesting existing forests and replanting with fast-growing species in managed plantations can worsen the climate impact of wood biofuel. Although managed loblolly pine grows faster than hardwood, speeding the initial recovery of forest biomass, the equilibrium carbon density of managed plantations is lower than unmanaged forest, so carbon sequestered in plantations never offsets the carbon taken from the original forest. This is true even if the managed plantation is never reharvested, and worse if the plantation is periodically reharvested. Further, typical plantations require periodic fertilization, increasing N_2O emissions and worsening their climate impact beyond what we report here (Schulze *et al* 2012).

Sixth, growth in wood harvest for bioenergy causes a steady increase in atmospheric CO_2 because the initial carbon debt incurred each year exceeds what is repaid. With the US forest parameters used here, growth in the wood pellet industry to displace coal aggravates global warming at least through the end of this century, even if the industry stops growing by 2050.

Seventh, using wood in electricity generation worsens climate change for decades or more even though many of our assumptions favor wood, including: wood displaces coal (the most carbon intensive fossil fuel); all harvested land is allowed to regrow as forest with no subsequent conversion to pasture, cropland, development or other uses; no subsequent harvest, fire or disease; no increase in coal demand resulting from lower prices induced by the decline in coal use for electric power; no increase in N_2O from fertilization of managed plantations; and no increase in CO_2 emissions or methanogenesis from disturbed land. Relaxing any of these assumptions worsens the climate impact of wood bioenergy.

In sum, although bioenergy from wood can lower long-run CO_2 concentrations compared to fossil fuels, its first impact is an increase in CO_2, worsening global warming over the critical period through 2100 even if the wood offsets coal, the most carbon-intensive fossil fuel. Declaring that biofuels are carbon neutral as the EU and others have done, erroneously assumes forest regrowth quickly and fully offsets the emissions from biofuel production and combustion. The neutrality assumption is not valid because it ignores the transient, but decades to centuries long, increase in CO_2 caused by biofuels.

Methodologically, we demonstrate the feasibility of integrating static life cycle considerations around the efficiencies of and emissions from biofuels with

explicit modeling of biomass dynamics in a model that runs fast enough to enable policymakers and other stakeholders to design and test their own scenarios. Future work will integrate the model into full climate models such as C-ROADS, creating a fast, interactive simulator that can model the impacts of different biofuel technologies and scenarios on CO_2 concentrations, radiative forcing, warming, ocean acidification, sea level rise and other impacts.

Acknowledgments

This work was supported by the National Science Foundation under grants DUE-124558 and ICER-1701062. We thank Tom Fiddaman, William Moomaw and Hazhir Rahmandad for helpful suggestions.

ORCID iDs

John D Sterman https://orcid.org/0000-0001-7476-6760
Juliette N Rooney-Varga https://orcid.org/0000-0001-7102-6919

References

Achat D, Deleuze C, Landmann G, Pousse N, Ranger J and Augusto L 2015 Quantifying consequences of removing harvesting residues on forest soils and tree growth–a meta-analysis *Forest Ecol. Manage.* **348** 124–41

Biofuture Platform 2017 Biofuture@COP23: major countries agree to scale up the low carbon bioeconomy and develop sustainable biofuels targets (http://biofutureplatform.org/major-countries-agree-scale-low-carbon-bioeconomy-develop-sustainable-biofuels-targets/)

Brack D 2017 *The Impacts of of the Demand for Woody Biomass for Power and Heat on Climate and Forests* (London: Chatham House, the Royal Institute of International Affairs)

Buchholz T, Hurteau M D, Gunn J and Saah D 2016 A global meta-analysis of forest bioenergy greenhouse gas emission accounting studies *Glob. Change Biol. Bioenergy* **8** 281–9

Cornwall W 2017 Is wood a green source of energy? Scientists are divided *Science* **355** 18–21

Creutzig F *et al* 2015 Bioenergy and climate change mitigation: an assessment *Glob. Change Biol. Bioenergy* **7** 916–44

DeCicco J M 2013 Biofuel's carbon balance: doubts, certainties and implications *Clim. Change* **121** 801–14

Doyle A and Roche A 2017 Nineteen nations say they will use more bioenergy to slow climate change *Reuters* (www.reuters.com/article/us-climatechange-accord-biofuels/nineteen-nations-say-theyll-use-more-bioenergy-to-slow-climate-change-idUSKBN1DG2DO)

European Commission 2003 *Directive 2003/87/EC of the European Parliament and of the Council of 13 October 2003* (Brussels: European Parliament) pp 32–46 (http://eur-lex.europa.eu/legal-content/EN/TXT/?uri=CELEX:32003L0087)

Fahey T J *et al* 2005 The biogeochemistry of carbon at Hubbard Brook *Biogeochemistry* **75** 109–76

FAO 2016 *Global Forest Resources Assessment 2015: How are the World's Forests Changing?* (Rome: Food and Agriculture Organization of the United Nations) (www.fao.org/3/a-i4793e.pdf)

Figueres C, Schellnhuber H J, Whiteman G, Rockstrom J, Hobley A and Rahmstorf S 2017 Three years to safeguard our climate *Nature* **546** 593–5

Helin T, Sokka L, Soimakallio S, Pingoud K and Pajula T 2013 Approaches for inclusion of forest carbon cycle in life cycle assessment—a review *Glob. Change Biol. Bioenergy* **5** 475–86

IEA 2012 *Technology Roadmap: Bioenergy for Heat and Power* (Paris: International Energy Agency) (www.iea.org/publications/freepublications/publication/2012_Bioenergy_Roadmap_2nd_Edition_WEB.pdf)

IEA 2016 *World Energy Outlook* (Paris: International Energy Agency) (www.iea.org/newsroom/news/2016/november/world-energy-outlook-2016.html)

IPCC 2013 *Working Group I Contribution to the IPCC Fifth Assessment Report Climate Change 2013: The Physical Science Basis* (Cambridge: Cambridge University Press) (www.ipcc.ch/report/ar5/wg1)

IPCC 2014 *Climate Change 2014: Impacts, Adaptation, and Vulnerability. Part A: Global and Sectoral Aspects. Contribution of Working Group II to the Fifth Assessment Report of the Intergovernmental Panel on Climate Change* ed C B Field *et al* (Cambridge: Cambridge University Press) pp 1–32 (www.ipcc.ch/report/ar5/wg2)

IRENA 2015 *Renewable Power Generation Costs in 2014* (Abu Dhabi: International Renewable Energy Agency) (www.irena.org/DocumentDownloads/Publications/IRENA_RE_Power_Costs_2014_report.pdf)

Ito A and Inatomi M 2012 Use of a process-based model for assessing the methane budgets of global terrestrial ecosystems and evaluation of uncertainty *Biogeosciences* **9** 759–73

Knutti R and Sedlacek J 2013 Robustness and uncertainties in the new CMIP5 climate model projections *Nat. Clim. Change* **3** 369–73

Leturcq P 2014 Wood preservation (carbon sequestration) or wood burning (fossil-fuel substitution), which is better for mitigating climate change? *Ann. Forest Sci.* **71** 117–24

Netherlands Enterprise Agency 2011 CO_2-tool electricity gas and heat from biomass—version 1.0.1 (Assen, The Netherlands) (www.rvo.nl/file/1252)

Ocko I B, Hamburg S P, Jacob D J, Keith D W, Keohane N O, Oppenheimer M, Roy-Mayhew J D, Schrag D P and Pacala S W 2017 Unmask temporal trade-offs in climate policy debates *Science* **356** 492–3

Odeh N A and Cockerill T T 2008 Life cycle GHG assessment of fossil fuel power plants with carbon capture and storage *Energ. Policy* **36** 367–80

Penman J, Gytarsky M and Hiraishi T 2003 *Good Practice Guidance for Land Use, Land Use Change, and Forestry* (Hayama, Kanagawa: Institute for Global Environmental Strategies for the Intergovernmental Panel on Climate Change) (www.ipcc-nggip.iges.or.jp/public/gpglulucf.html)

Richards F J 1959 A flexible growth function for empirical use *J. Exp. Bot.* **10** 290–300

Röder M, Whittaker C and Thornley P 2015 How certain are greenhouse gas reductions from bioenergy? Life cycle assessment and uncertainty analysis of wood pellet-to-electricity supply chains from forest residues *Biomass Bioenergy* **79** 50–63

Saunois M *et al* 2016 The global methane budget 2000–2012 *Earth Syst. Sci. Data* **8** 697–751

Schulze E-D, Körner C, Law B, Haberl H and Luyssaert S 2012 Large-scale bioenergy from additional harvest of forest biomass is neither sustainable nor greenhouse gas neutral *Glob. Change Biol. Bioenergy* **4** 611–6

Shoemaker J K, Keenan T F, Hollinger D Y and Richardson A D 2014 Forest ecosystem changes from annual methane source to sink depending on late summer water balance *Geophys. Res. Lett.* **41** 673–9

Smith J E, Heath L S, Skog K E and Birdsey R A 2006 Methods for calculating forest ecosystem and harvested carbon with standard estimates for forest types of the United States (www.fs.usda.gov/treesearch/pubs/22954)

Sterman J, Fiddaman T, Franck T, Jones A, McCauley S, Rice P, Sawin E and Siegel L 2012 Climate interactive: the C-ROADS climate policy model *Syst. Dyn. Rev.* **28** 295–305

Sterman J D, Fiddaman T, Franck T, Jones A, McCauley S, Rice P, Sawin E and Siegel L 2013 Management flight simulators to support climate negotiations *Environ. Modell. Softw.* **44** 122–35

Stupak I *et al* 2007 Sustainable utilisation of forest biomass for energy—possibilities and problems: policy, legislation, certification, and recommendations and guidelines in the Nordic, Baltic, and other European countries *Biomass Bioenergy* **31** 666–84

Ter-Mikaelian M T, Colombo S J and Chen J 2015 The burning question: does forest bioenergy reduce carbon emissions? A review of common misconceptions about forest carbon accounting *J. Forest.* **113** 57–68

Thrän D, Peetz D and Schaubach K 2017 *Global Wood Pellet Industry and Trade Study 2017* (Paris: IEA Bioenergy) p 243 (http://task40.ieabioenergy.com/wp-content/uploads/2013/09/IEA-Wood-Pellet-Study_final-2017-06.pdf)

US Forest Service 2000 *Landowners Handbook for Managing Southern Pines* (Atlanta, GA: US Forest Service-Southern Region) (http://ncforestry.info/fs/managing_southern_pines/)

US EIA 2016 *International Energy Outlook 2016* (Washington, DC: US Energy Information Administration) p 276 (www.eia.gov/outlooks/ieo/pdf/0484(2016).pdf)

Vuuren D *et al* 2011 The representative concentration pathways: an overview *Clim. Change* **109** 5–31

Woodall C W *et al* 2015 *The US Forest Carbon Accounting Framework: Stocks and Stock Change 1990–2016* (Newtown Square, PA: US Forest Service) (www.fs.usda.gov/treesearch/pubs/49858)

York R 2012 Do alternative energy sources displace fossil fuels? *Nat. Clim. Change* **2** 441–3